Top View

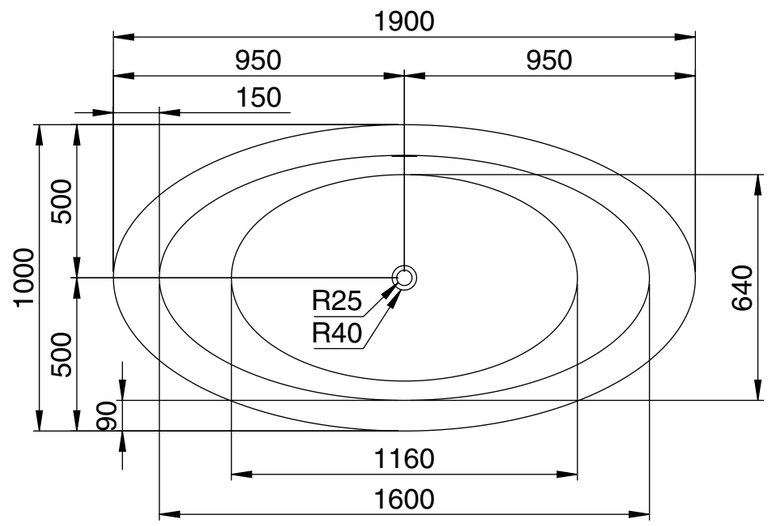

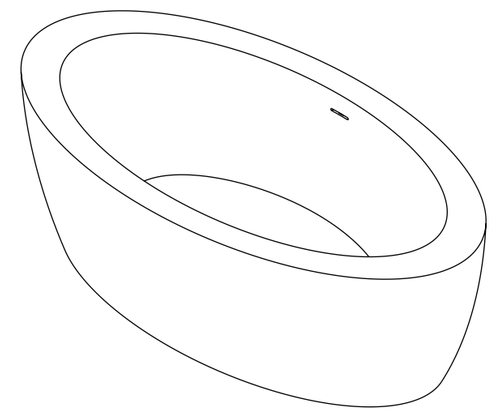

Front View - Section View

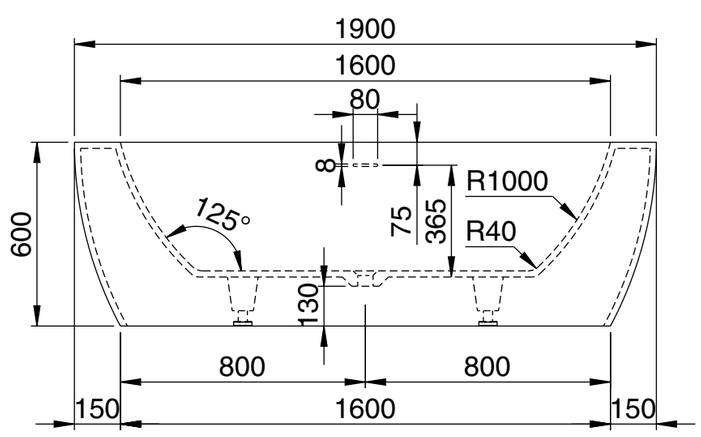

Side View - Section View

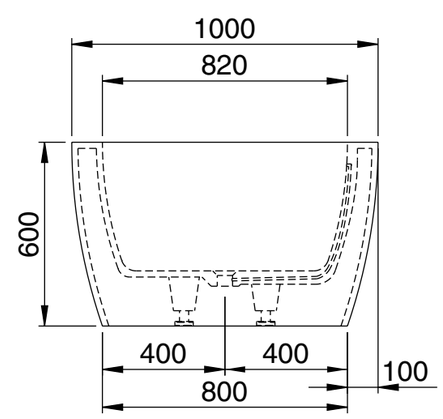

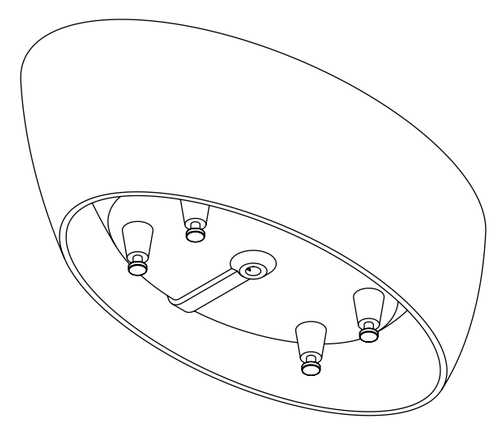

LUSSO	Product Name	Oceanus 1900
	Material	Stone Resin
	Product Size (mm)	1900 x 1000 x 600

All dimensions provided in millimeters.