Top View

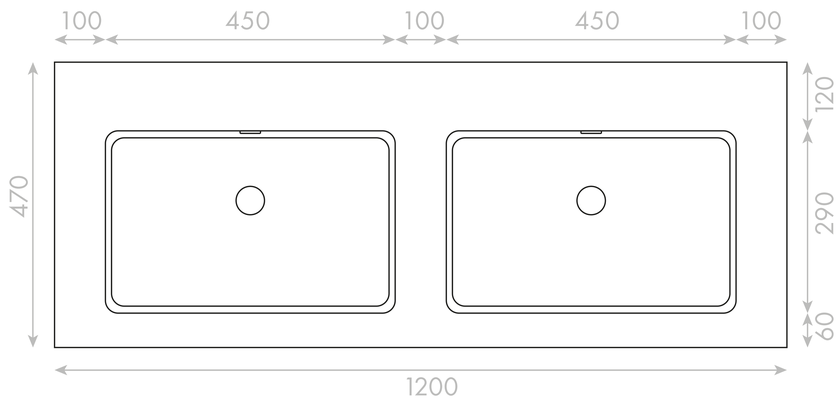

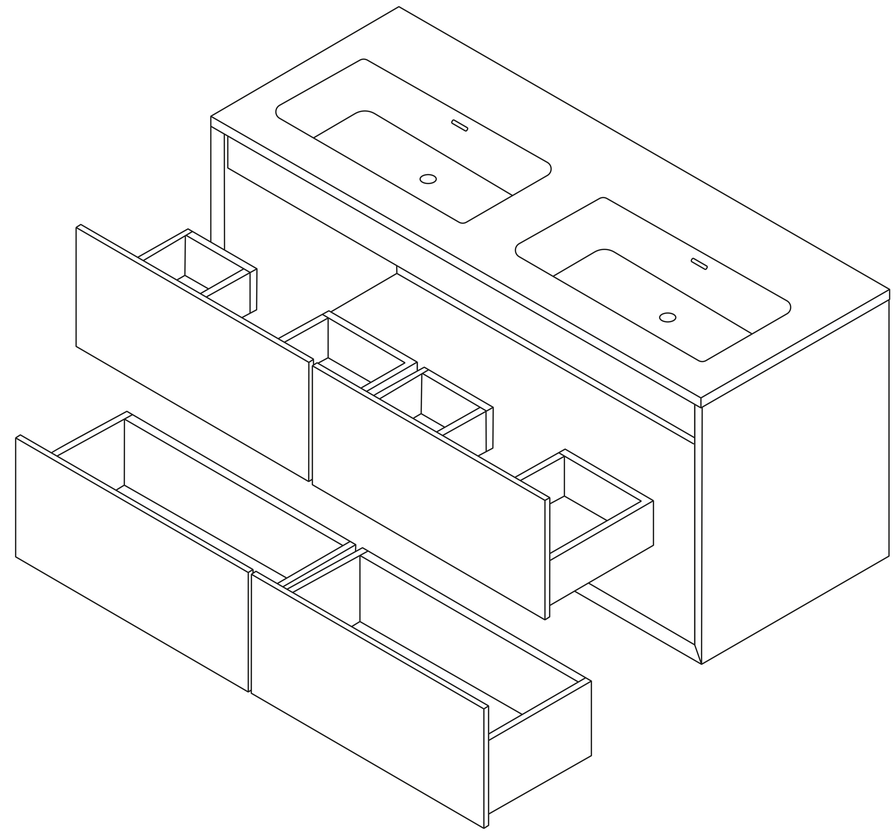

Top View - Section View

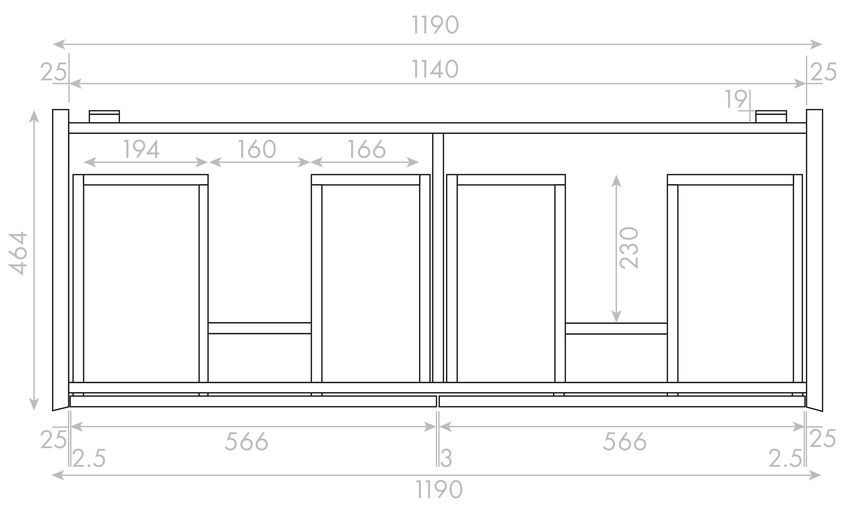

Side View - Section View

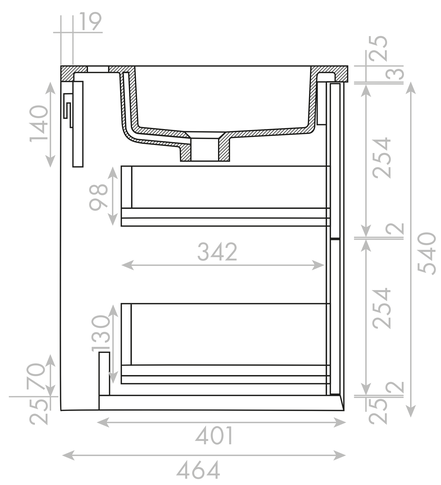

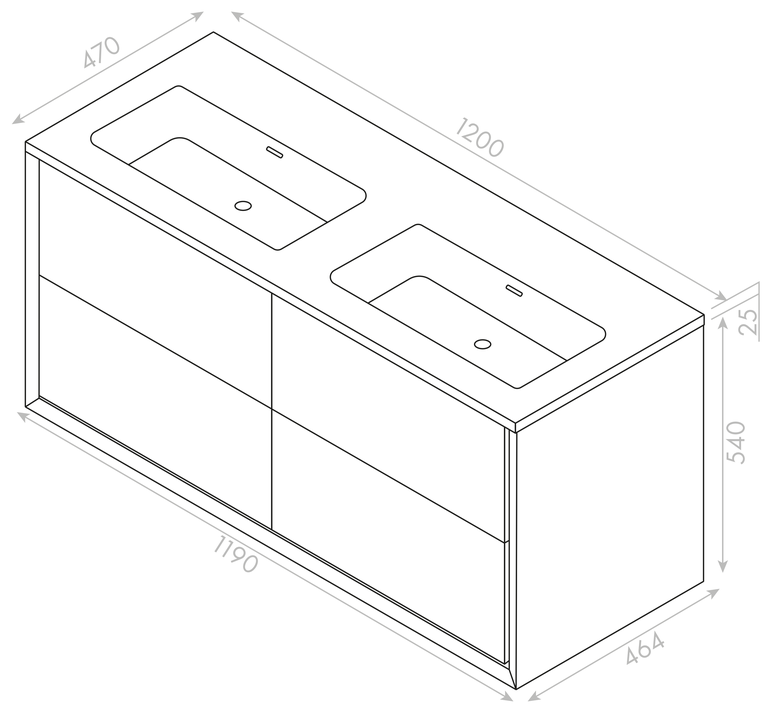

LUSSO	Product Name	Volini 1200 Double
	Material	Stone Resin Basin/Wood Cabinet
	Product Size (mm)	1190 x 464 x 540

All dimensions provided in millimeters.
All vanity units are supplied with no tap hole (s). If you require a tap hole, you will need to use a standard 38mm hole-saw drill attachment.