Front View

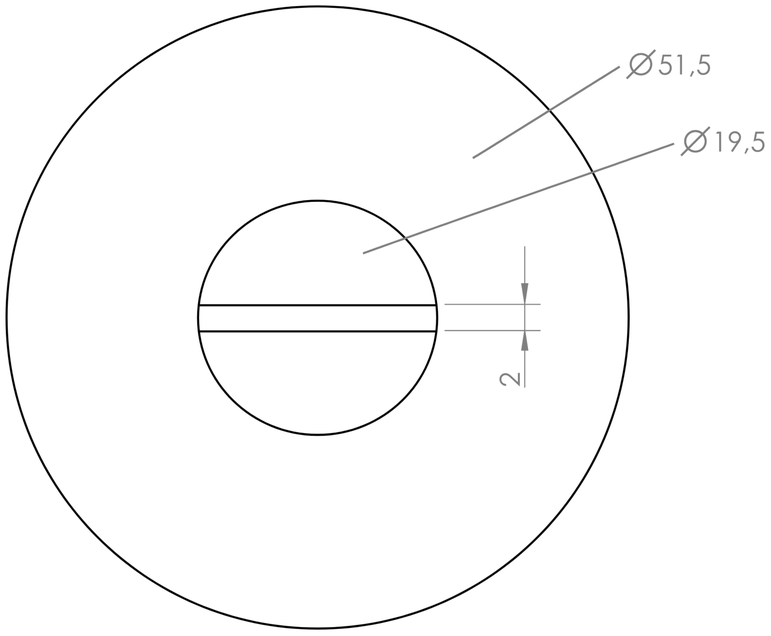

Side View

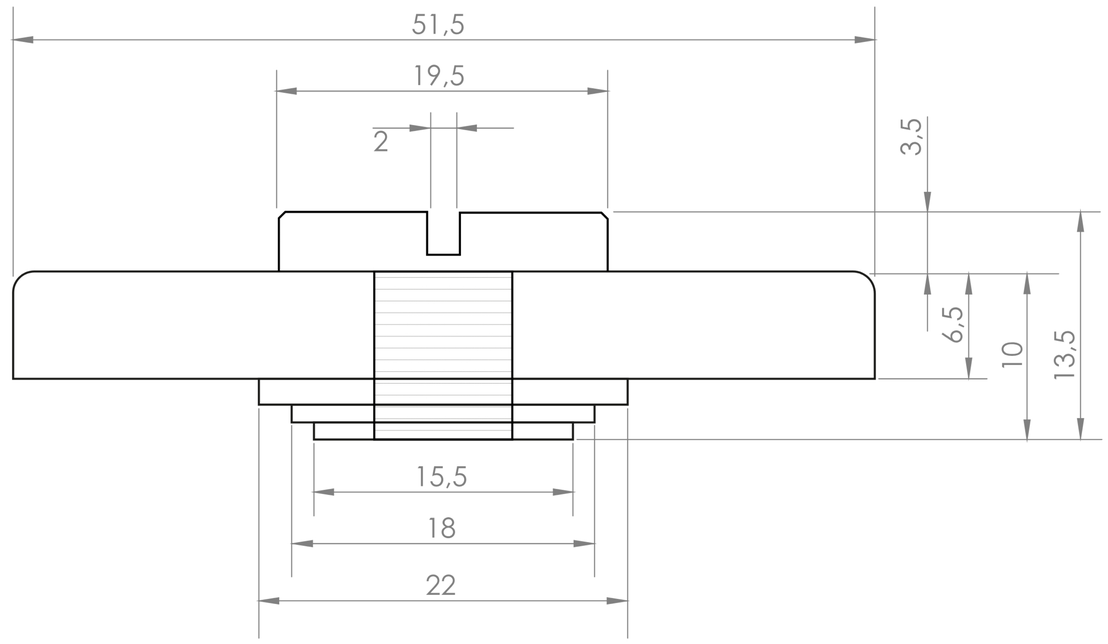

Thumbturn - Top View

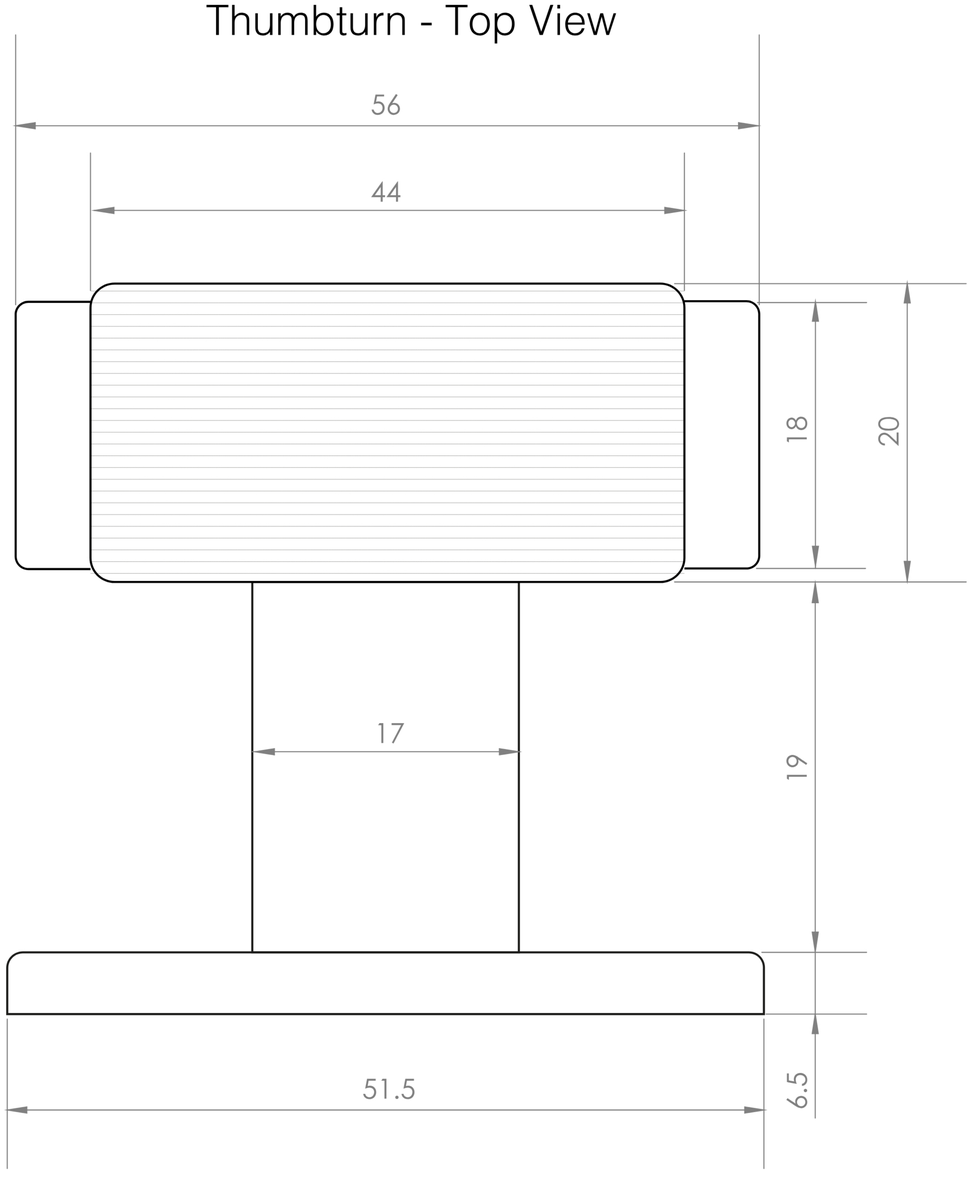

Tubular Latch

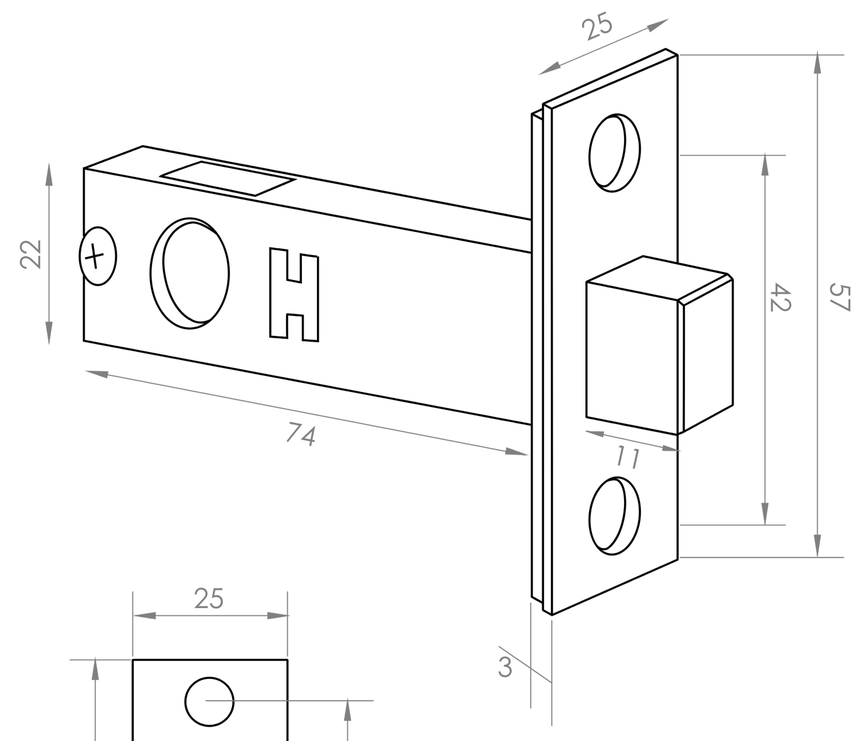

LUSSO	Product Name	Fluted Latch Set
	Product Type	Internal Door Latch

All dimensions provided in millimeters.